H-type

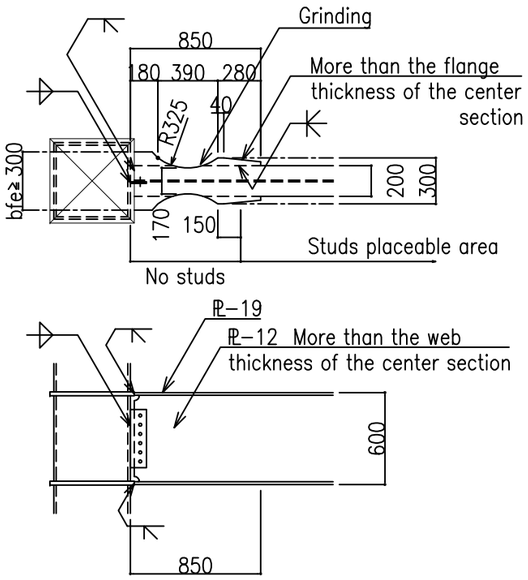

BH-600x200x12x19

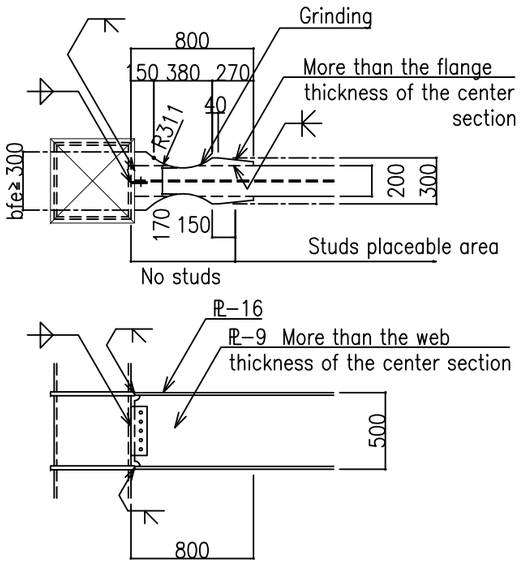

BH-450x200x9x16

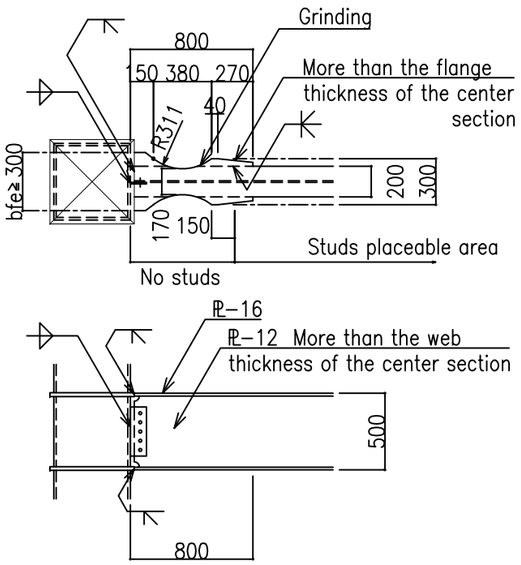

BH-500x200x12x16

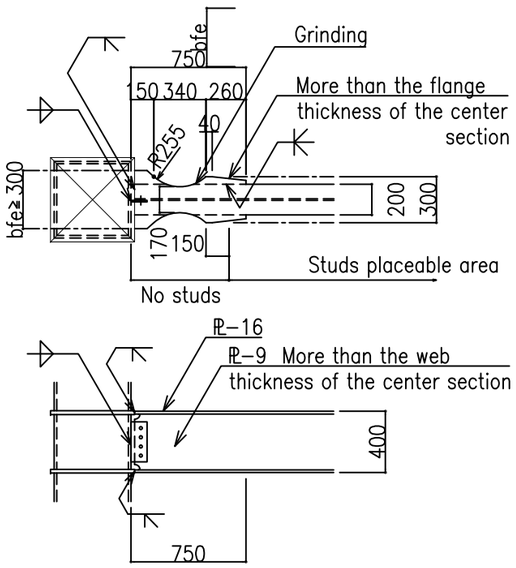

BH-400x200x9x16

Construction standards

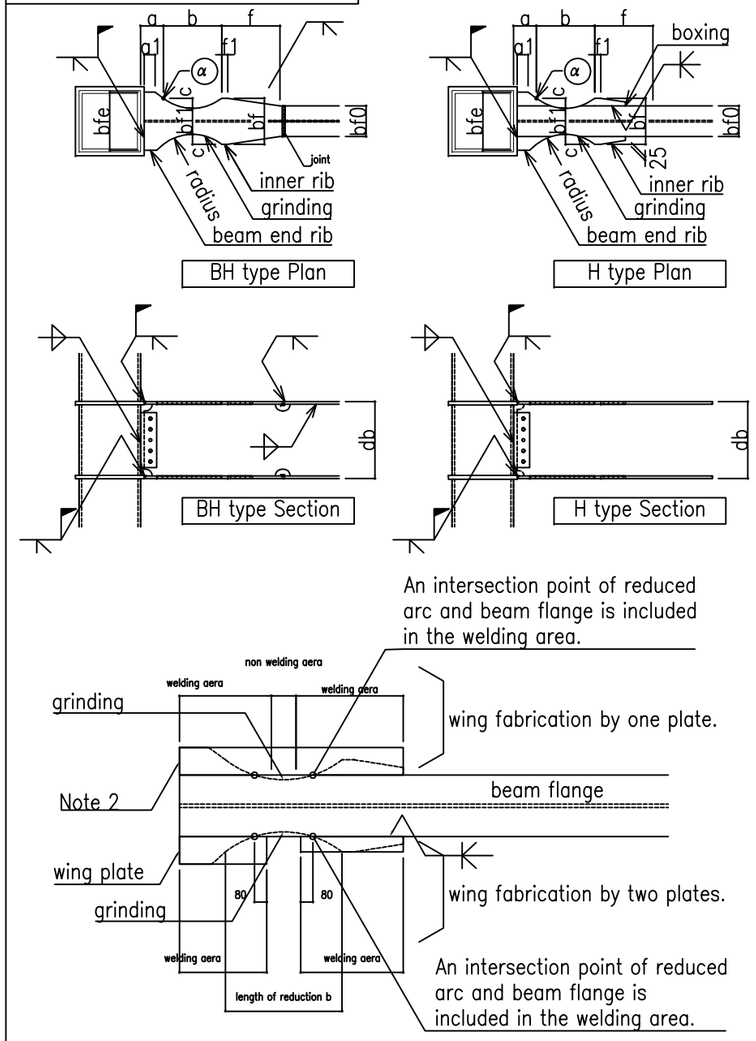

Flange reduction fabrication

Note 1)fabricate either one or two plates method.
Note 2)When using a backing bar, align the lower flange surface and the lower one for the horizontal rib at the beam end.
The surrounding reinforcement should have a smooth finish to eliminate gaps. tf+3≥trib≥tf
Note 3) If flange thickness is less than 16mm, consider weld performance

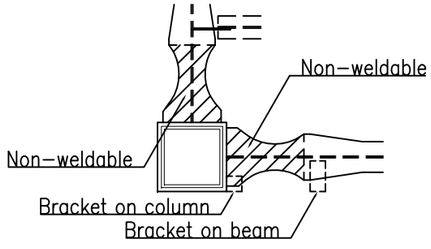

Gusset installation

Parameters & Details	Limitations
Beam symmetry	Wing and reduction shape should be symmetric.
Width-thickness ratio of beam	FA rank. Evaluate it using the center flange width bf0 even withthe reduced section.
Lateral stiffening of the beam	"Lateral stiffening ensuring horizontal load carrying capacity". Evaluate using Af1 and iy at thereduction length. Gusset plates of stiffening member should not be welded, within the range a+b from the beam end.
Minimum span- to-depth ratio	[span/depth] 5
Centre flange width	Centre flange width: : bf0≤300
Flange thickness tf	40mm maximum
Eccentric connection to column	Flange width at face bfe is within the column width.
Floor rigidity	Concrete slab or a metal deck and concrete slab or horizontal bracing should be used.
Welded studs of composite slab	Welded studs should not be placed in the area of the beam flange between the column face and 6 inches beyond the extreme end of the ERBS(a+b+15cm).
Supplementary information about the shape	• Point α provides length a and b. • When flange width of the face is increased by more than bf , extend it nearly in the tangential direction from the point α. Flange width at face bfe is more than bf.

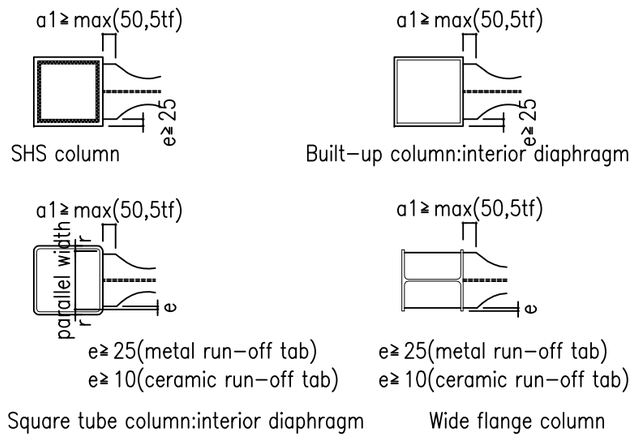

H-type

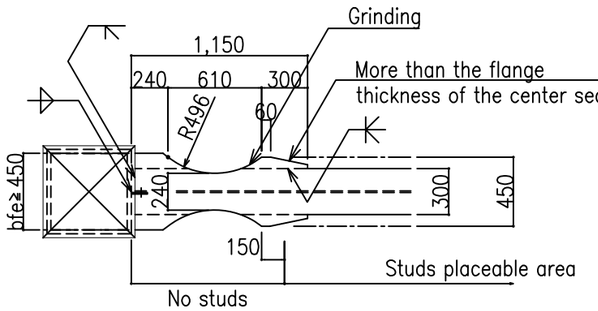

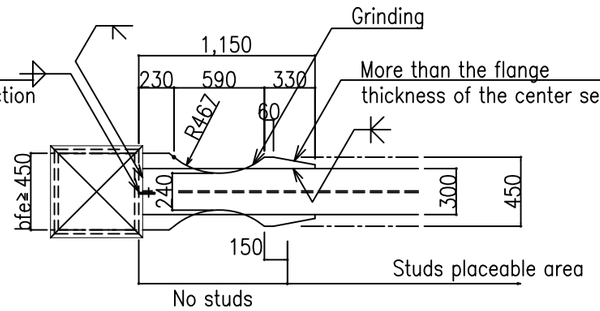

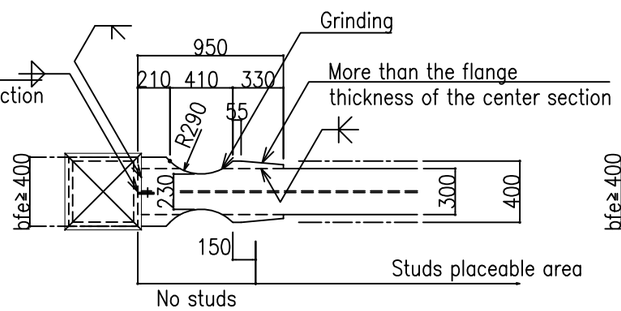

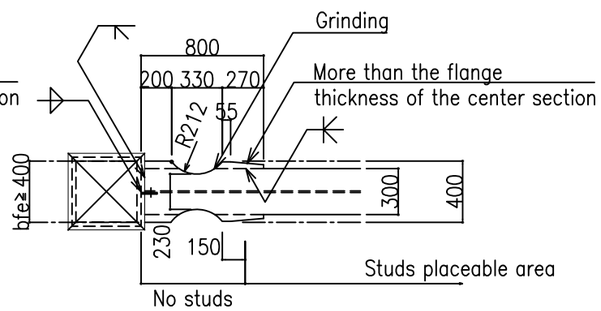

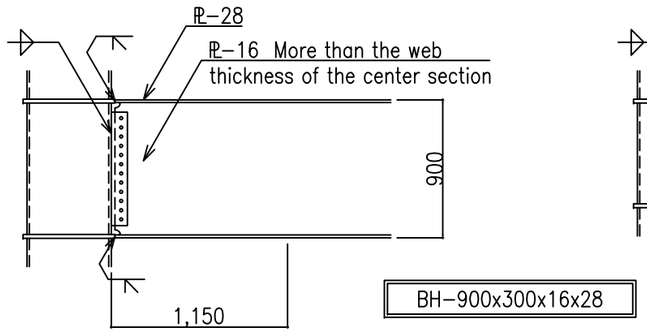

BH-900x300x16x28

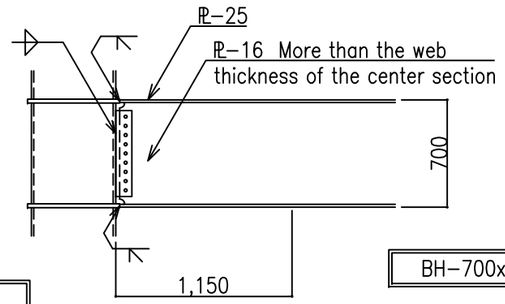

BH-700x300x16x25

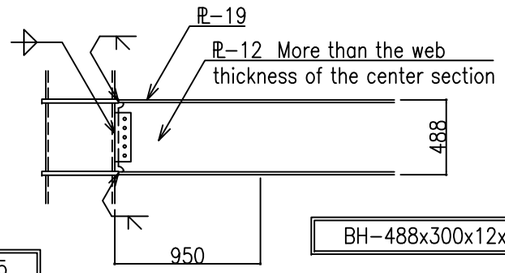

BH-488x300x12x19

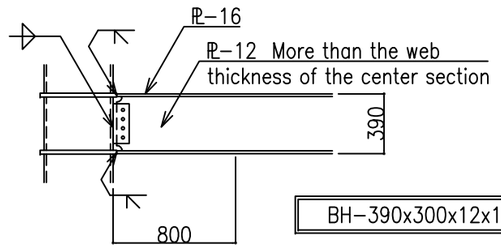

BH-390x300x12x16

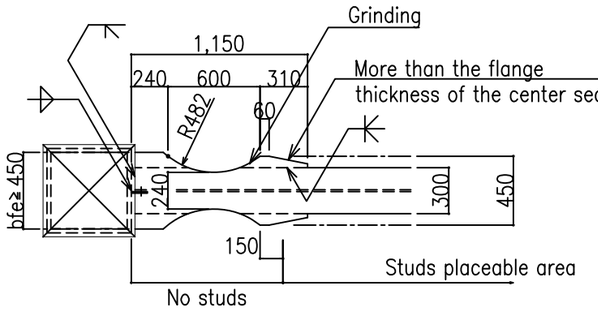

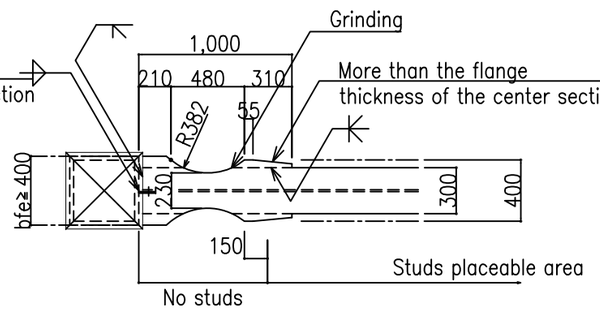

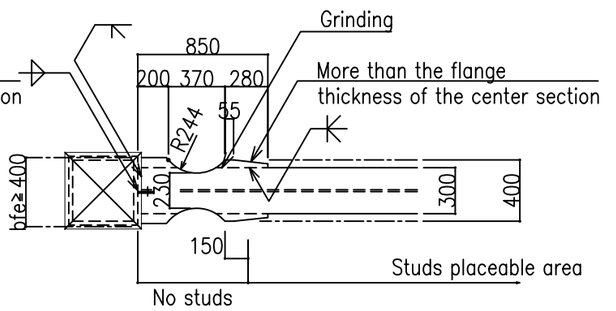

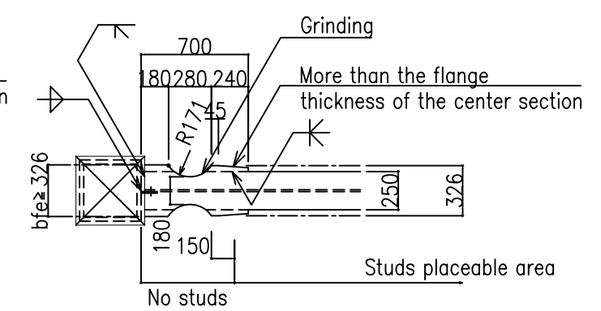

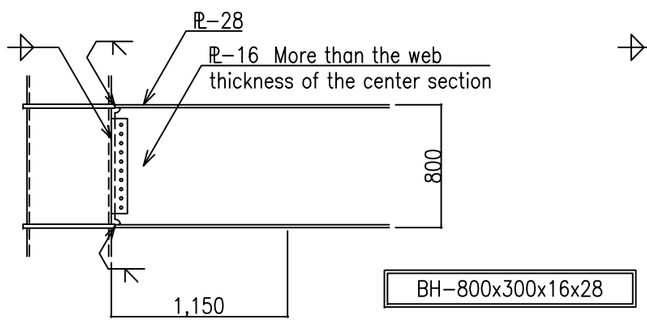

BH-800x300x16x28

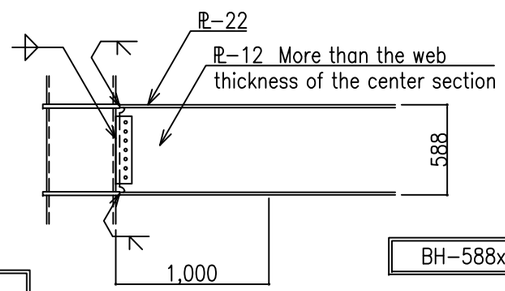

BH-588x300x12x22

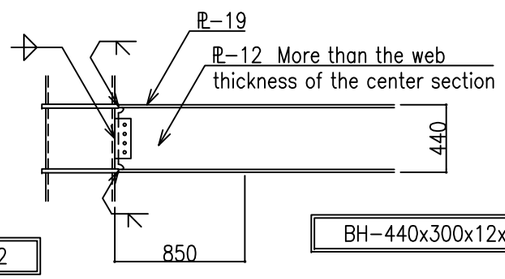

BH-440x300x12x19

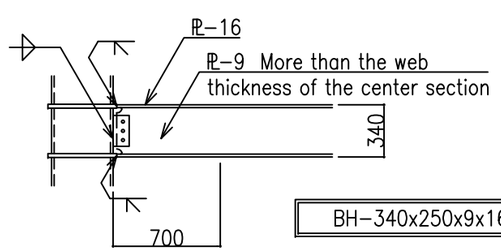

BH-340x250x9x16

BH-type

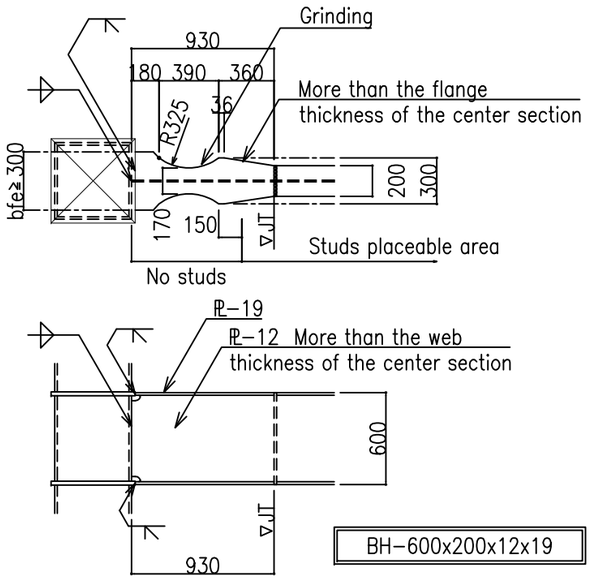
Grinding
930
180 390 360
36
R325
More than the flange
thickness of the center section
bfe≥300
200
300
170
150
JT
Studs placeable area
No studs
PL-19
PL-12 More than the web
thickness of the center section
600
930
BH-600x200x12x19

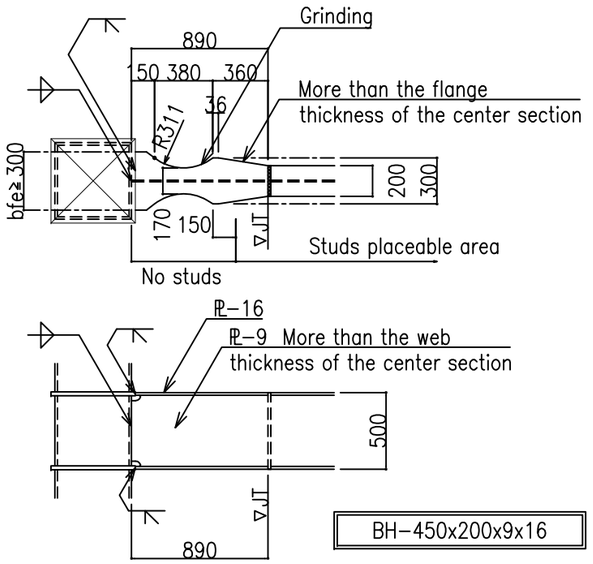
Grinding
890
150 380 360
36
R311
More than the flange
thickness of the center section
bfe≥300
200
300
170
150
JT
Studs placeable area
No studs
PL-16
PL-9 More than the web
thickness of the center section
500
890
BH-450x200x9x16

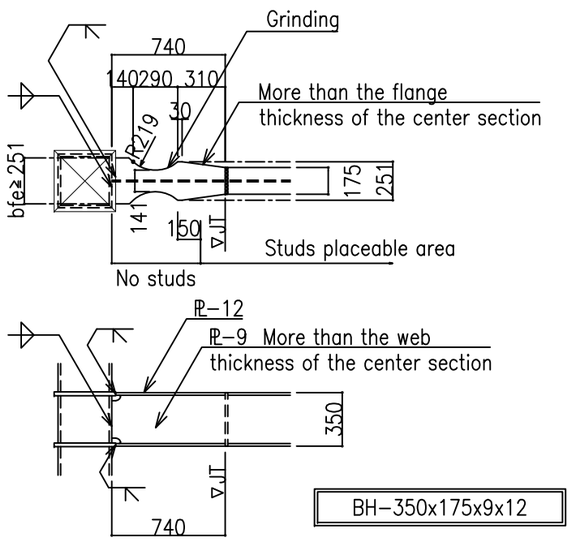
Grinding
740
140 290 310
30
R279
More than the flange
thickness of the center section
bfe≥251
175
251
141
150
JT
Studs placeable area
No studs
PL-12
PL-9 More than the web
thickness of the center section
350
740
BH-350x175x9x12

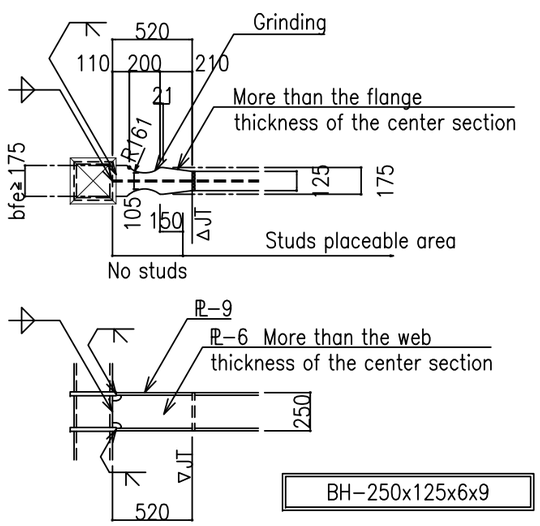
Grinding
520
110 200 210
21
R161
More than the flange
thickness of the center section
bfe≥175
125
175
105
150
JT
Studs placeable area
No studs
PL-9
PL-6 More than the web
thickness of the center section
250
520
BH-250x125x6x9

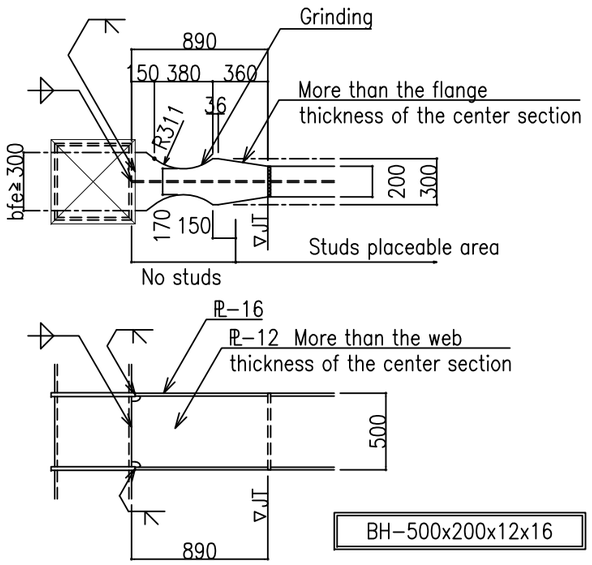
Grinding
890
150 380 360
36
R311
More than the flange
thickness of the center section
bfe≥300
200
300
170
150
JT
Studs placeable area
No studs
PL-16
PL-12 More than the web
thickness of the center section
500
890
BH-500x200x12x16

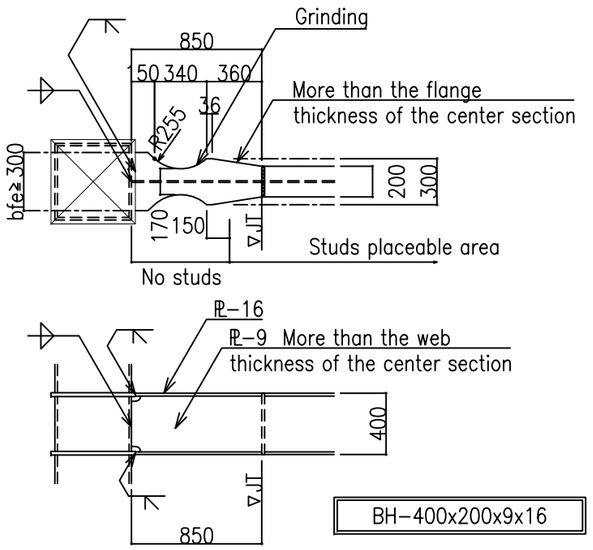
Grinding
850
150 340 360
36
R255
More than the flange
thickness of the center section
bfe≥300
200
300
170
150
JT
Studs placeable area
No studs
PL-16
PL-9 More than the web
thickness of the center section
400
850
BH-400x200x9x16

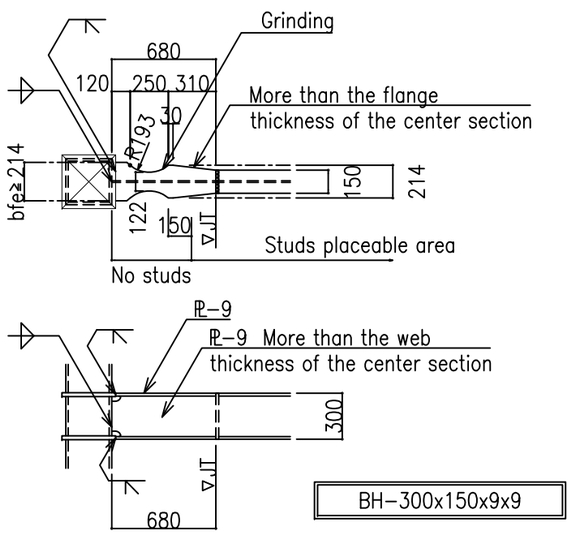
Grinding
680
120 250 310
30
R193
More than the flange
thickness of the center section
bfe≥214
150
214
122
150
JT
Studs placeable area
No studs
PL-9
PL-9 More than the web
thickness of the center section
300
680
BH-300x150x9x9

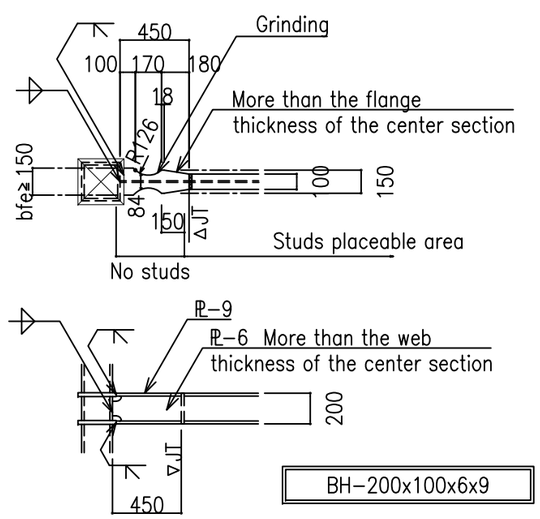
Grinding
450
100 170 180
18
R126
More than the flange
thickness of the center section
bfe≥150
100
150
84
150
JT
Studs placeable area
No studs
PL-9
PL-6 More than the web
thickness of the center section
200
450
BH-200x100x6x9

BH-type

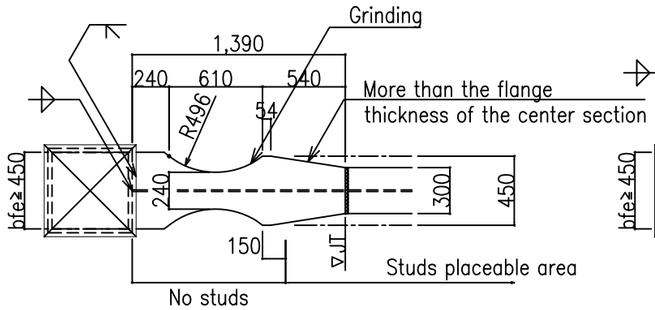

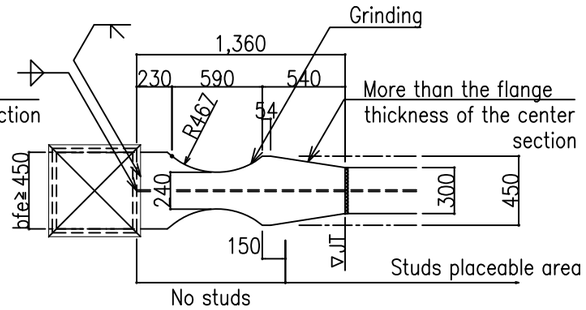

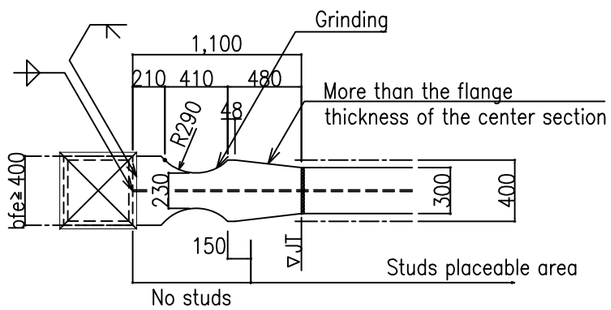

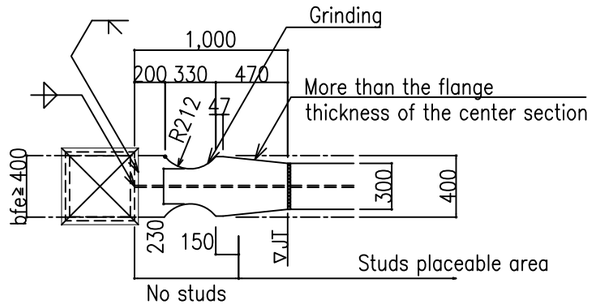

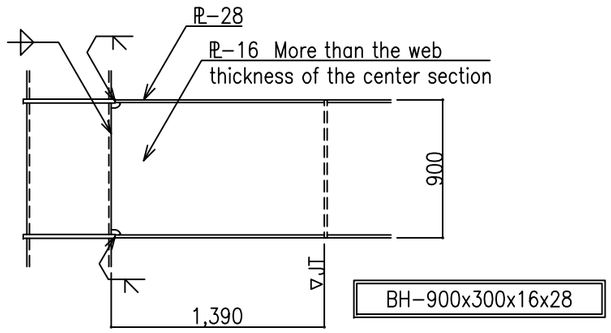

BH-900x300x16x28

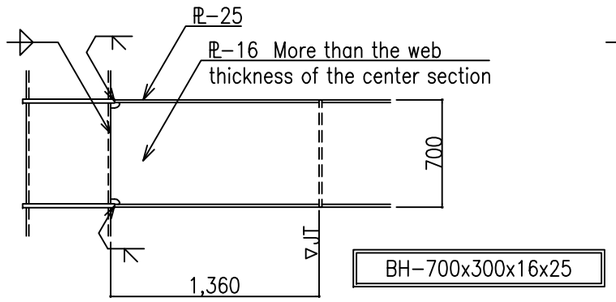

BH-700x300x16x25

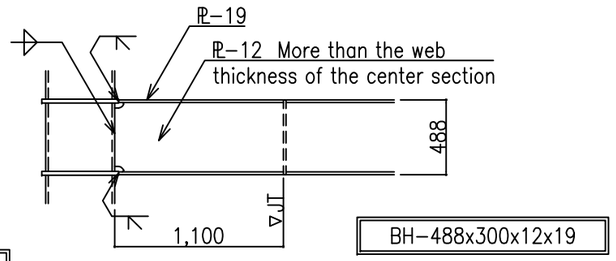

BH-488x300x12x19

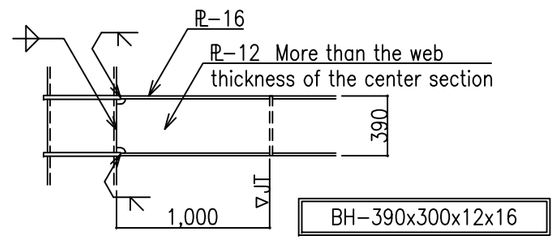

BH-390x300x12x16

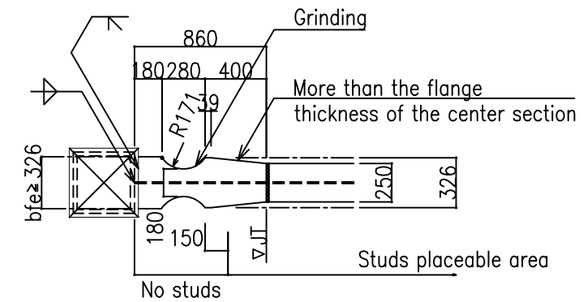

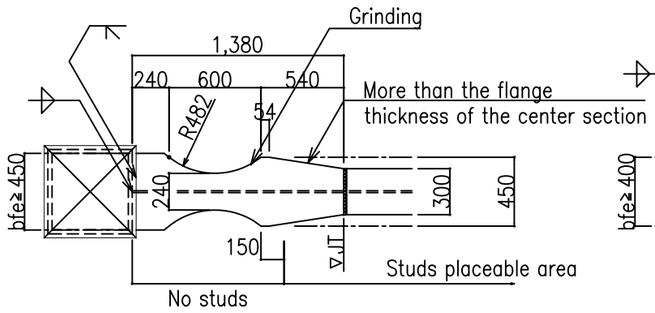

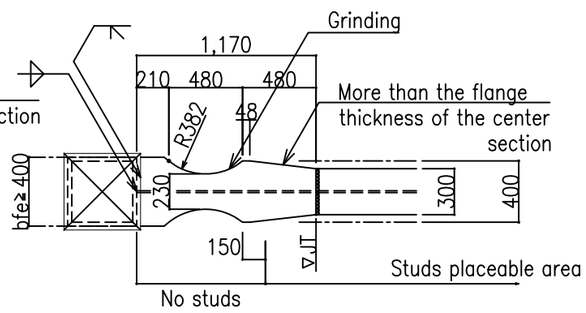

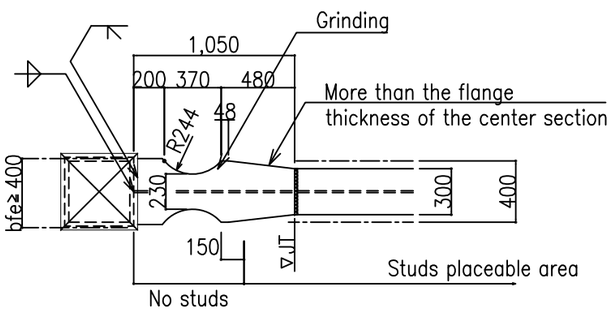

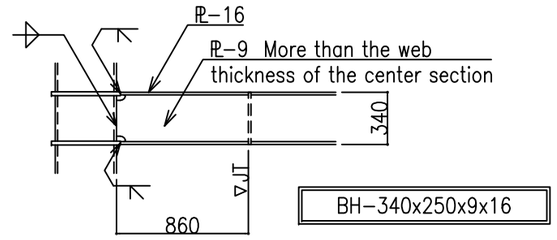

BH-340x250x9x16

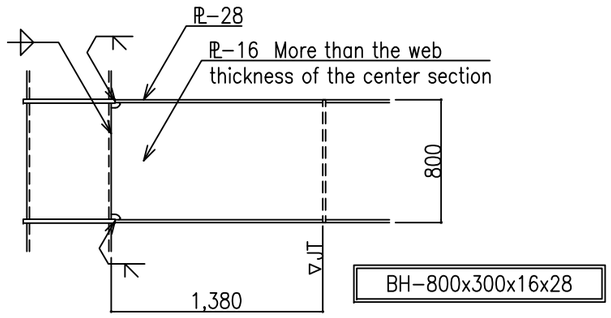

BH-800x300x16x28

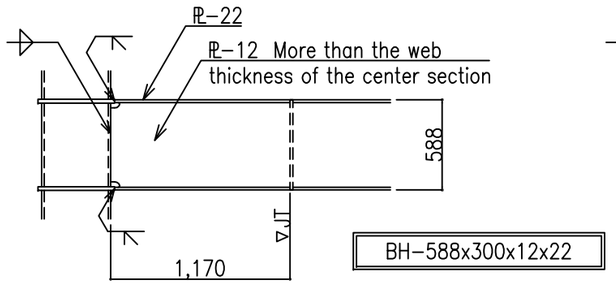

BH-588x300x12x22

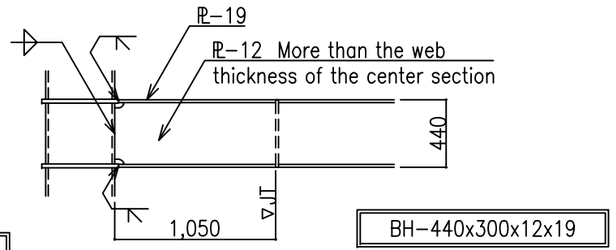

BH-440x300x12x19

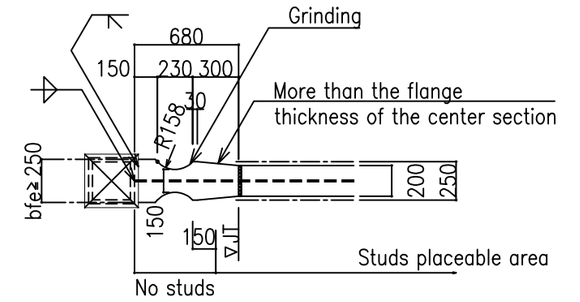

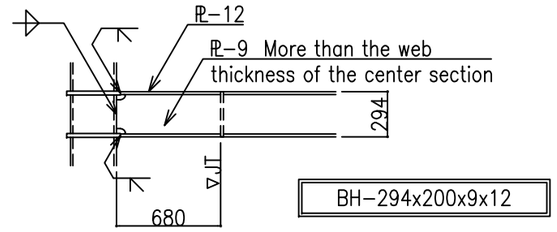

BH-294x200x9x12